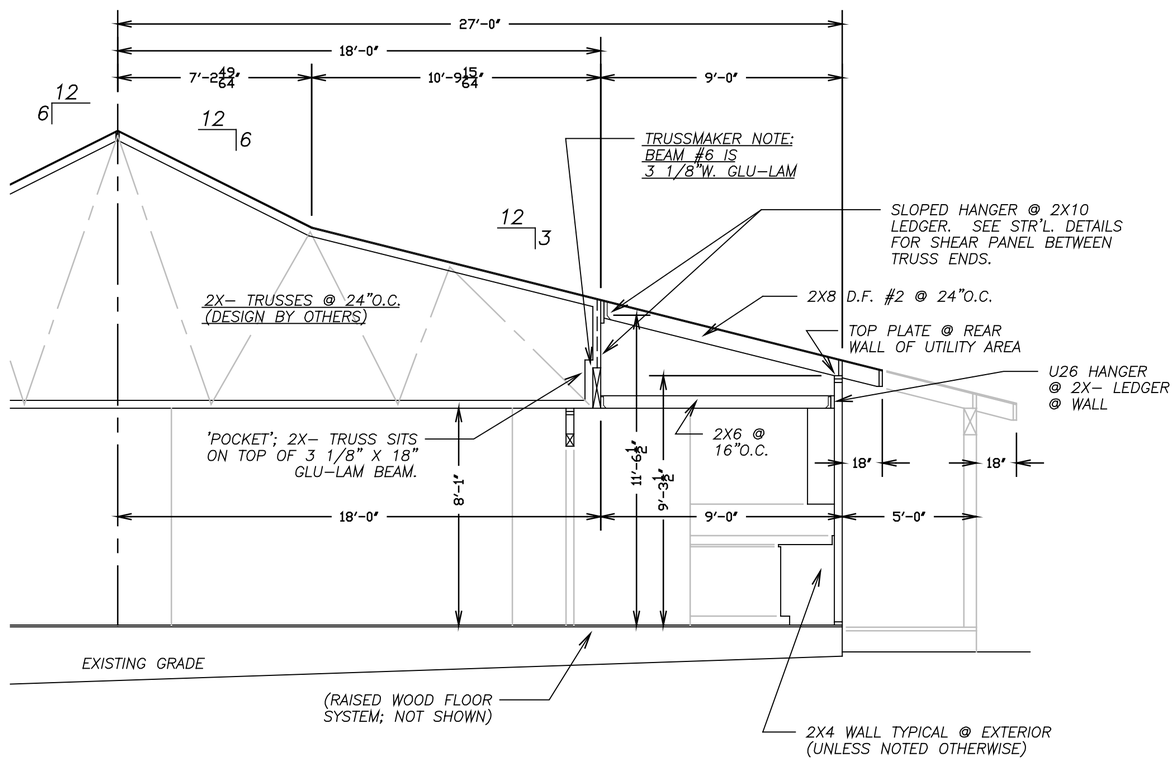

STRUCTURAL SECTION: #4 @ UTILITY AREA

4

SCALE: 1/4" = 1'-0"