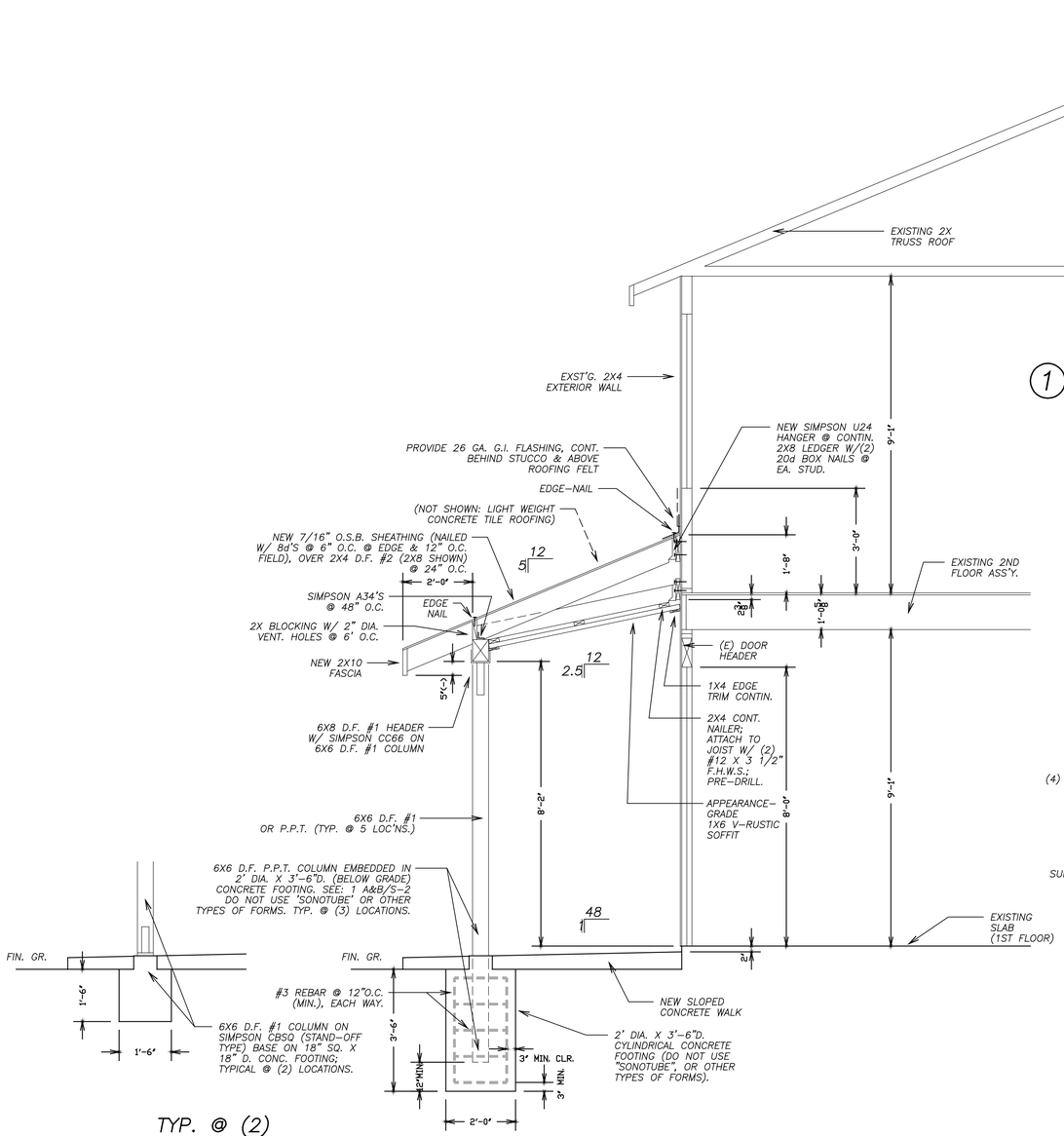

1 SECTION @ NEW PORCH CANOPY

SCALE: 1/2" = 1'–0"

A TYP. @ (2) END COLUMNS

SCALE: 1/2" = 1'–0"

B TYP. @ (3) COLUMNS

SCALE: 1/2" = 1'–0"

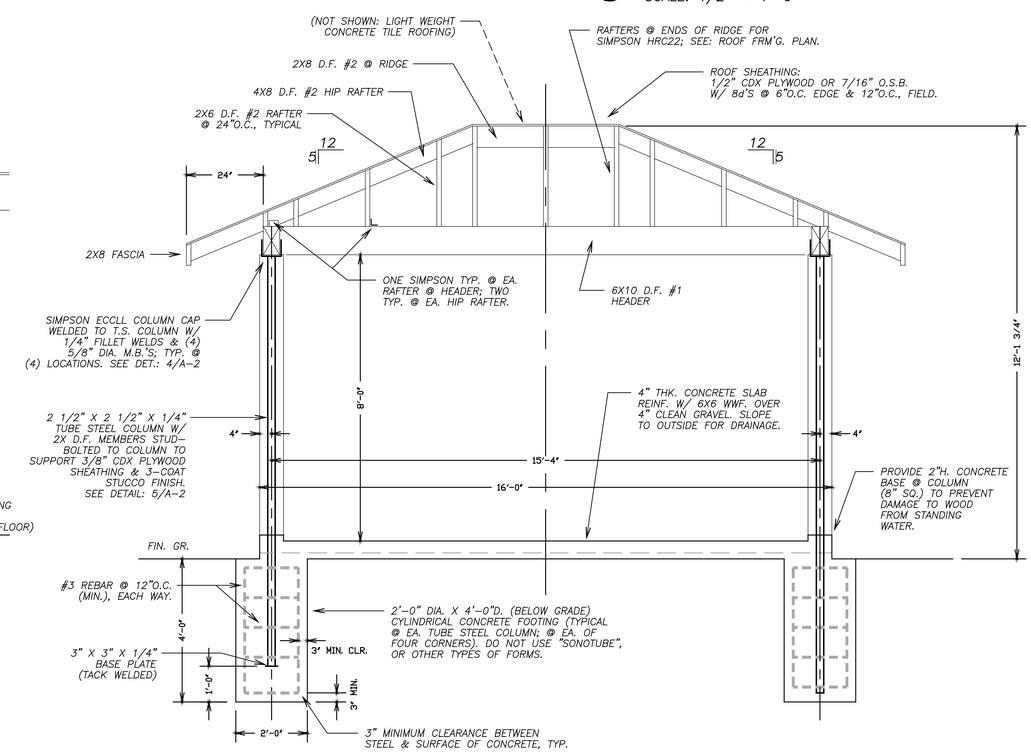

2 SECTION @ NEW DETACHED BACKYARD SHELTER

SCALE: 1/2" = 1'–0"